Air Driven, High Pressure Liquid Pumps

Condensed Product Catalog

Catalog: 02-9326BE

May 2015

aerospace
climate control
electromechanical
filtration
fluid & gas handling
hydraulics
pneumatics
process control
sealing & shielding

Parker

Autoclave Engineers®

ENGINEERING YOUR SUCCESS.

Table of Contents

Introduction

Parker Autoclave Engineers has always been a large user of Air-over-Liquid pump technology and has a lifetime of experience using all variety of pumps in many different configurations. We have used this experience to develop a best-in-breed line of air-driven, high pressure pumps that are efficient to operate, simple in design, and will stand the test of time. Compared to other types of hydraulic pumps, they provide cost effective and energy saving benefits for many applications in the Oil and Gas, Chemical, Industrial and Research industries.

These pumps convert simple air pressure into high and ultra-high liquid pressures by utilizing a large area piston on the air side to move a small area plunger to compress the liquid into very high hydraulic pressures - as high as 60,000 psi (4137 bar). Some designs are for economy, some for manual use, some for low-flow & high pressure, some for high flow & medium pressure… Choice – what a concept! Pumps like these are perfect for product testing, valve actuation, chemical injection and other applications that require intense pressure. When used in conjunction with a Hydraulic Intensifier (another PAE product) pressures to 150,000 psi (10,000 bar) are normal.

Parker Autoclave Engineers has been making pressure and corrosion test systems as well as high pressure laboratory reaction vessels for over 70 years. Packaged Pressure Systems incorporating these Air-Driven, High Pressure Liquid pumps, plus our valves, fittings and other instrumentation was an automatic success story. We have created a wide range of self-contained portable, custom framed modules that “plug and play” for virtually any pressure test, control, or injection system you can imagine. They vary in size, flow capability, output pressure and can include optional features such as chart recording, data logging, cycle counters, injection controllers and almost any kind of electric or pneumatic valve control option.

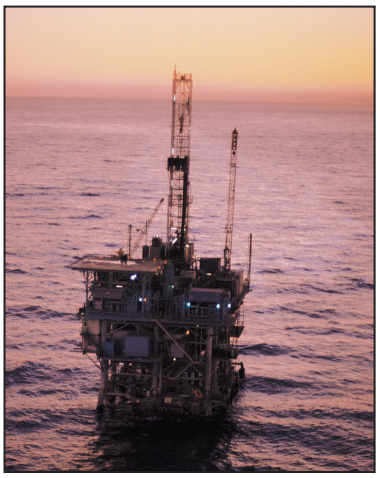

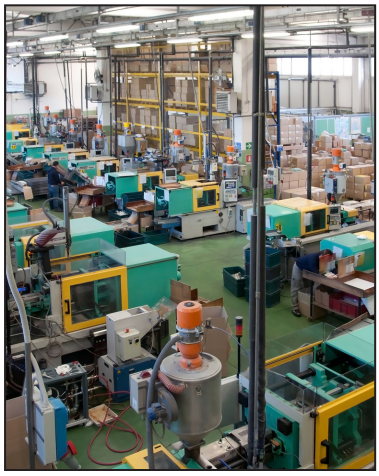

Pump Series Models

ASL Series:
- Standard Liquid Pump
- Pressures up to 60,000 psi (4137 bar)
- Approximately 6 inches in diameter air piston
- Broad range of ratios

ACL Series:
- Compact Liquid Pump
- Pressures up to 31,900 psi (2199 bar)
- Approximately 3 inches in diameter air piston

ACHL Series:
- ACL Series Pump with hand lever
- Pressures up to 31,900 psi (2199 bar)
- Precise Pressure control operation, pump is spring returned

AHL Series:
- High Flow Liquid
- Pressures up to 13,300 psi (917 bar)
- Approximately 10 inches in diameter air piston
- Dual Acting

AFL Series:
- High Flow, High Pressure
- Pressures up to 12,500 psi (862 bar)
- Flow up to 3 gpm
- Dual Acting

Drive Types

Pump Model				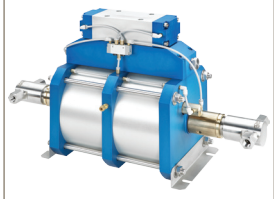
Catalog Number Suffix	-01	-02	-1D	-2D
Description	Single Acting, Single Piston	Single Acting, Double Piston	Double Acting, Single Piston	Double Acting, Double Piston

Catalog Number Example: ACL189**-01**

Quick Reference Guide

Pump Model Series	Pressure Ratio	Maximum Rated Outlet Pressure PSI (bar)	Displacement Per Cycle .in³ (cm³)	Liquid Connections	
				Inlet	Outlet
ACL Series					
ACL72-01	1:88	12,500 (862)	0.09 (1.47)	3/8” FNPT	F250C
ACL111-01	1:130	18,850 (1,300)	0.05 (0.8)	3/8” FNPT	F250C
ACL189-01	1:220	31,900 (2,199)	0.04 (0.7)	3/8” FNPT	F250C
ACL189-02	1:440	60,000 (4,137)	0.04 (0.7)	3/8” FNPT	F250C
ACHL Series					
ACHL72-01	1:84	12,500 (862)	0.09 (1.47)	3/8” FNPT	F250C
ACHL189-01	1:213	31,900 (2,1990)	0.035 (0.57)	3/8” FNPT	F250C
ASL Series					
ASL10-01	1:11	1,600 (110)	5.22 (85.5)	1” FNPT	1/2” FNPT
ASL15-01	1:16	2,300 (159)	3.62 (59.3)	1” FNPT	1/2” FNPT
ASL25-01	1:28	4,000 (276)	2.10 (34.4)	1/2” FNPT	1/2” FNPT
ASL35-01	1:39	5,600 (386)	1.50 (24.64)	1/2” FNPT	1/2” FNPT
ASL60-01	1:70	10,000 (689)	0.84 (13.8)	1/2” FNPT	1/2” FNPT
ASL100-01	1:113	15,000 (1,034)	0.52 (8.5)	1/2” FNPT	1/2” FNPT
ASL150-01	1:150	21,500 (1,482)	0.39 (6.4)	1/2” FNPT	F250C
ASL250-01	1:265	38,400 (2,648)	0.22 (3.6)	1/2” FNPT	F250C
ASL400-01	1:398	57,700 (3,978)	0.14 (2.3)	1/2” FNPT	F250C
ASL10-02	1:22	3,200 (221)	5.22 (85.5)	1” FNPT	1/2” FNPT
ASL15-02	1:32	4,600 (317)	3.62 (59.3)	1” FNPT	1/2” FNPT
ASL25-02	1:56	8,100 (558)	2.10 (34.4)	1/2” FNPT	1/2” FNPT
ASL35-02	1:78	11,200 (772)	1.50 (24.64)	1/2” FNPT	1/2” FNPT
ASL60-02	1:140	20,000 (1,379)	0.84 (13.8)	1/2” FNPT	9/16” SF562CX
ASL100-02	1:226	31,000 (2,137)	0.52 (8.5)	1/2” FNPT	F250C
ASL150-02	1:300	43,000 (2,965)	0.39 (6.4)	1/2” FNPT	F250C
ASL250-02	1:530	60,000 (4,137)	0.22 (3.6)	1/2” FNPT	F250C
ASL400-02	1:796	60,000 (4,137)	0.14 (2.3)	1/2” FNPT	F250C
AHL Series					
AHL33-2D	1:67	6,700 (462)	15.3 (250.7)	1” FNPT	1/2” FNPT
AHL66-2D	1:133	13,300 (917)	7.8 (127.8)	1/2” FNPT	1/2” FNPT
AFL Series					
AFL35-1D	1:39	5,600 (386)	6.02 (98.7)	1” FNPT	9/16” SF562CX
AFL60-1D	1:70	10,000 (690)	3.40 (55.7)	1” FNPT	9/16” SF562CX
AFL100-1D	1:113	15,000 (1034)	2.30 (37.7)	1” FNPT	9/16” SF562CX

Pump Operation

Piston to Plunger Ratio

- Compressed air is used to produce hydraulic pressure
- Works on differential surface area between the large air piston and smaller hydraulic plunger
- Differential is represented by the pressure ratio of the pump

Pressure Ratio = Area of Air Piston ÷ Area of Hydraulic Plunger

- The higher the pressure ratio, the higher the output hydraulic pressure

Pressure Output = Pressure Ratio x Air Drive Pressure

- When air is applied to the pump it will cycle until the forces on the air piston equals the forces on the hydraulic plunger. This is the stall pressure.
- Pump will automatically restart if there is a drop in hydraulic pressure or an increase in air drive pressure.
- Double air pistons available which will double the pressure ratio because you have twice the air piston area acting on the same hydraulic plunger area.

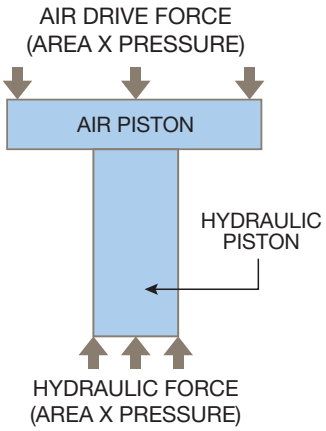

Air Drive Section

- Compressed air is used to produce hydraulic pressure
- Works on differential surface area between the large air piston and smaller hydraulic plunger
- Differential is represented by the pressure ratio of the pump

Section 1 • Air pilot operated spool provides automatic cycling of air from one side of the piston to the other • At the end of each stroke, the air piston activates a pilot valve that will cause the spool to shift	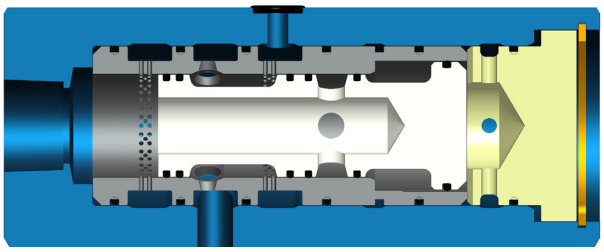
Section 2 • The spool shifting will supply air to one side of the piston while venting the other side of the piston • This alternating action continues until the pump reaches its stall pressure	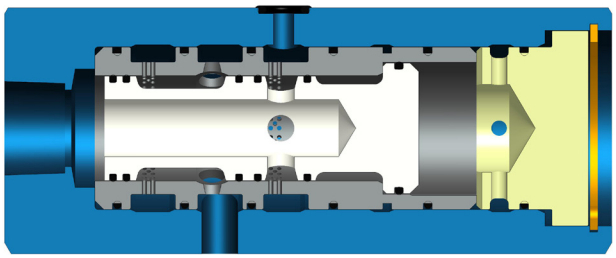

Typical Pump Cut-Away

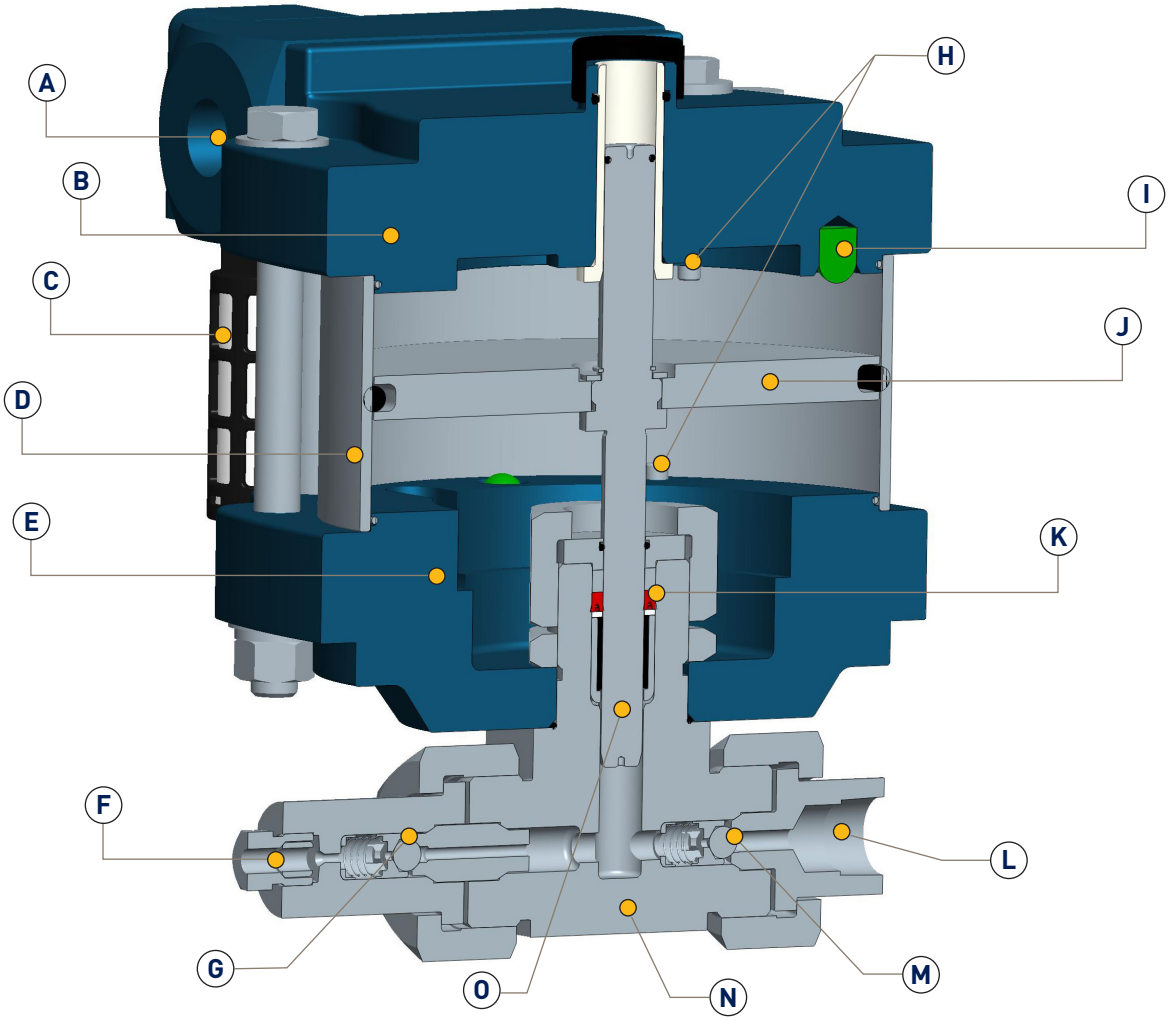

	Description			Description
A	Air Inlet		I	Air Piston Bumper
B	Top End Cap		J	Air Piston
C	Air Muffler		K	High Pressure Seal Assembly
D	Air Cylinder		L	Liquid Inlet Connection
E	Bottom End Cap		M	Inlet Check Valve
F	High Pressure Outlet Connection		N	Pump Head Body
G	Outlet Check Valve		O	Hydraulic Plunger
H	Pilot Valve			

Pump Special Features & Benefits

- All Aluminum parts machined from high quality bar stock, not cast aluminum components
- Anodizing with special sealing technique to provide better protection from harsh environments
- Muffler specified to give a great combination of high flow and low noise
- Rubber bumpers in end caps to reduce noise of operation
- Latest lubrication technology provides long seal service life and improves pump efficiency and performance
- No lubricator required for air drive source
- Stainless steel tie-rods and hardware
- Stainless plunger coated with a proprietary multi-layer carbon based coating with diamond like carbon exterior layer:
    - High hardness (3 times harder than Stellite)
    - Inert, it has superior chemical compatibility and corrosion resistance
    - Low friction that limits seal wear and increases efficiency (coefficient of friction equal to or less than PTFE)
    - Tough coating that provides long plunger cycle life. (Have never had to replace a coated plunger during prototype testing)
- Pressure head specially designed and engineered for high cycle life
- Spring energized u-cup seal provides better sealing performance at wide ranges of pressures
- Extended service life check valves with Ceramic balls for high pressure applications

ACL SERIES Single-Acting, Single Piston Air Drive

- Single-Acting, Single or Double Piston Air Drive
- Service: Oil, Water, Water/Oil mixture and other fluids depending on material compatibility
- Maximum Operating Temperature: 0-140º F (-18º to 60º C)
- Net Weight: 8 lbs. (3.6 kg)
- Pressure Head: 316 Stainless Steel
- Plunger: 440 Stainless Steel
- Check Valve Glands: 15-5PH Stainless Steel
- Liquid Seal: see Ordering Guide for options
- Air Drive Seals: Buna N

Reference Guide

Pump Model Series	Pressure Ratio	Maximum Rated Outlet Pressure PSI (bar)	Displacement Per Cycle .in³ (cm³)	Liquid Connections	
				Inlet	Outlet
ACL Series					
ACL72-01	1:88	12,500 (862)	0.09 (1.47)	3/8” FNPT	F250C
ACL111-01	1:130	18,850 (1,300)	0.05 (0.08)	3/8” FNPT	F250C
ACL189-01	1:220	31,900 (2,199)	0.04 (0.07)	3/8” FNPT	F250C
ACL189-02	1:440	60,000 (4,137)	0.04 (0.07)	3/8” FNPT	F250C

Air Drive Connection - All ACL series pumps have a 1/4” FNPT main air drive supply connection

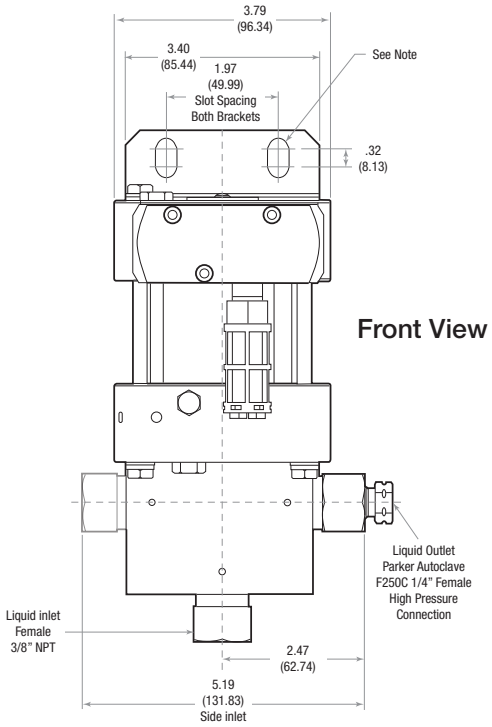

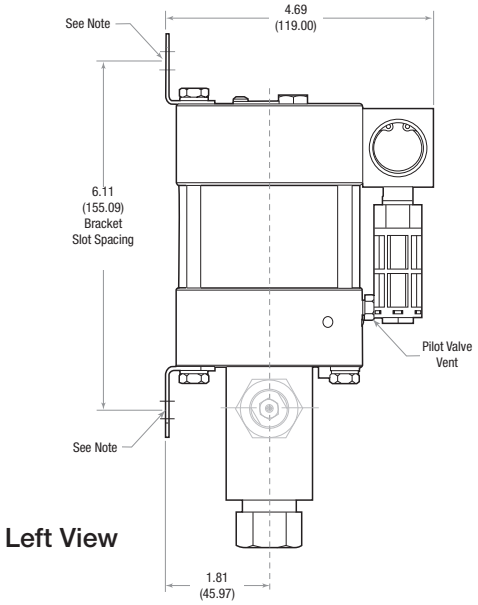

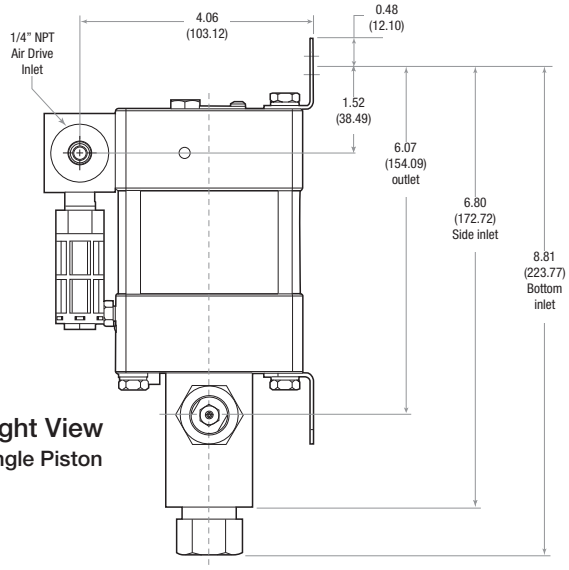

Right View
Single Piston

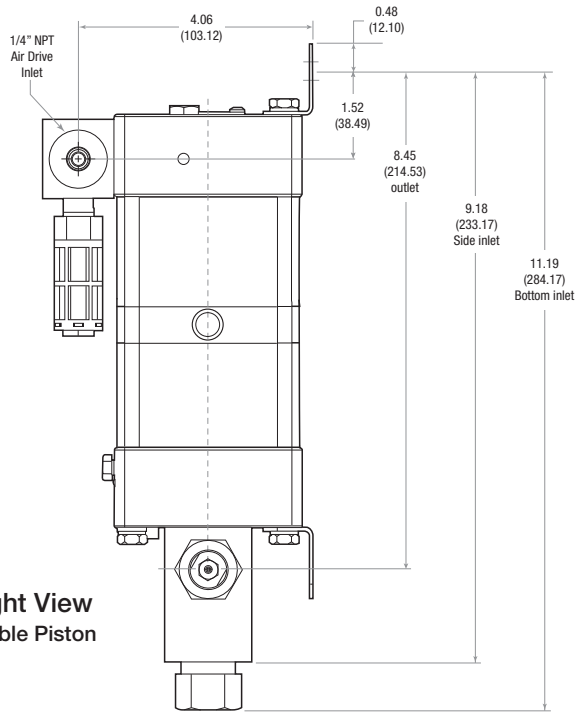

Right View
Double Piston

Note:
Each mounting bracket includes (2) x 3/8" (9.53) slots for 5/16" bolts.
Bottom inlet pump head and side inlet pump head are mutually exclusive.
All dimensions are for reference only and are subject to change without notice.

Primary dimensions: Inches
Secondary Dimensions: (Millimeters)

Ordering Guide

Typical catalog number example: **ACL189-01SNP**
(catalog number is created based on customer selection of product parameters, see below for example)

ACL189-01	S	N	P
Pump Series Type/Size/Ratio	**Liquid Inlet Location**	**Isolation Chamber**	**Liquid Seal Material**
ACL • Compact Liquid High Pressure Pump • 3" Single Piston Air Drive • 1:220 Air-to-Liquid Pressure Ratio • Maximum 31,900 psi (2,199 bar)	**S*** = Side **B** = Bottom	**N*** = None	**P*** = UHMWPE U-Cup with Elgiloy Spring Energizer **U** = Urethane U-Cup

* Standard for stock pumps

Flow Rate Table: Air Drive Pressure (psi) vs. Outlet Pressure (psi)

Catalog Number	Air Drive Pressure (psi)	Outlet Pressure (psi)											
		0	500	1,500	3,000	5,000	7,500	10,000	15,000	25,000	40,000	55,000	
ACL72-01	60	42	32	17	9	1							
	90	42	34	25	18	7	1						
	120	43	35	29	24	17	7	2					
ACL111-01	60	28	23	14	9	5	1						
	90	28	25	19	15	10	5	2					
	120	29	26	21	18	15	10	6	1				in^3 /min.
ACL189-01	60	15	15	14	13	12	9	6					
	90	15	15	15	14	14	13	11	6				
	120	15	15	15	15	15	14	13	10	1			
ACL189-02	60	13	12	11	10	9	7	7	5	1			
	90	14	13	12	11	8	8	8	7	5			
	120	17	16	14	12	10	9	8	8	7	4		

ACHL SERIES Single-Acting, Single Air Drive with Hand Lever

- Single-Acting, Single Air Drive with Hand Lever
- Service: Oil, Water, Water/Oil mixture and other fluids depending on material compatibility
- Standard Hand Lever for precise pressure control, remote locations or emergency back-up applications.
- Maximum Operating Temperature: 0-140º F (-18º to 60º C)
- Net Weight: 8 lbs. (3.6 kg)
- Pressure Head: 316 Stainless Steel
- Plunger: 440 Stainless Steel
- Check Valve Glands: 15-5PH Stainless Steel
- Liquid Seal: see Ordering Guide for options
- Air Drive Seals: Buna N

Reference Guide

Pump Model Series	Pressure Ratio	Maximum Rated Outlet Pressure PSI (bar)	Displacement Per Cycle .in³ (cm³)	Liquid Connections	
				Inlet	Outlet
ACHL Series					
ACHL72-01	1:84	12,500 (862)	0.09 (1.47)	3/8” FNPT	F250C
ACHL189-01	1:213	31,900 (2,199)	0.035 (0.57)	3/8” FNPT	F250C

Air Drive Connection - All ACHL series pumps have a 1/4” FNPT main air drive supply connection

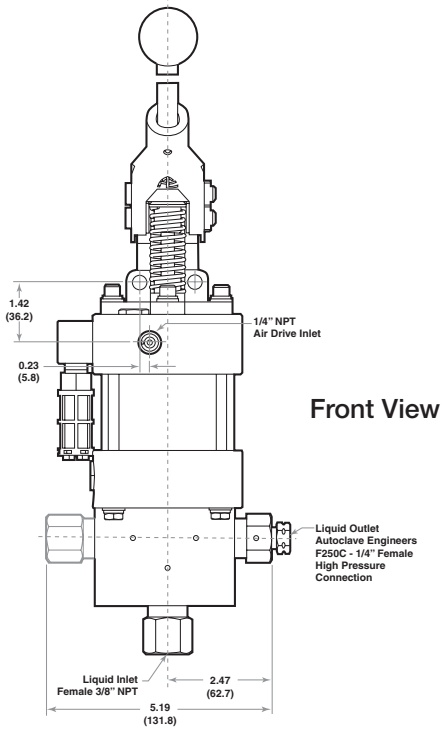

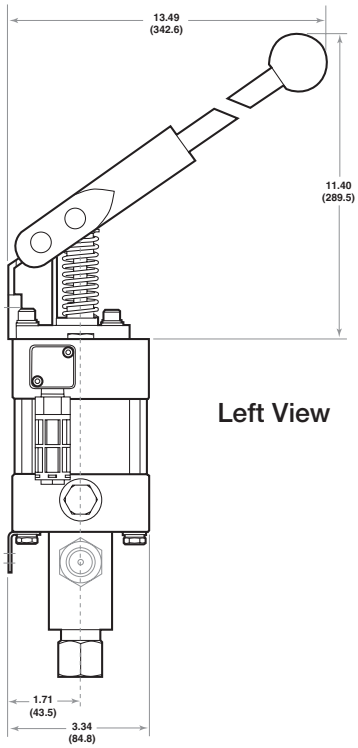

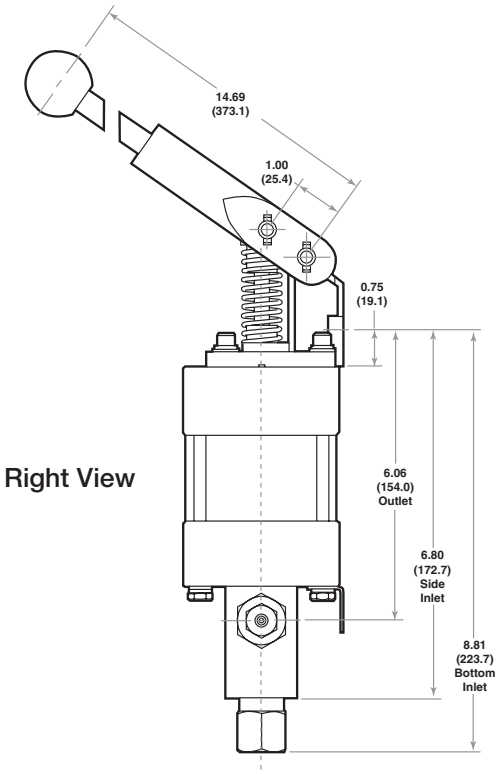

Right View

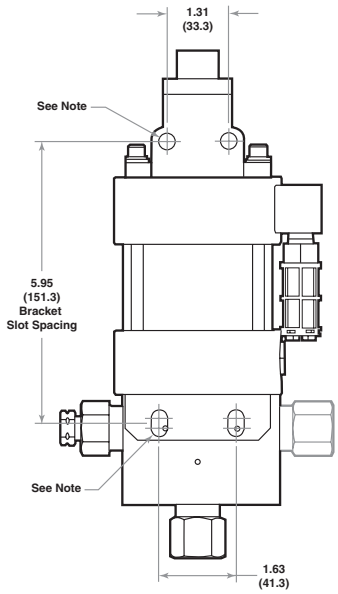

Bottom View

Note:

Each mounting bracket includes (2) x 11/32" (8.73) slots for 5/16" bolts.

Bottom inlet pump head and side inlet pump head are mutually exclusive.
All dimensions are for reference only and are subject to change without notice.

Primary dimensions: Inches

Secondary Dimensions: (Millimeters)

Ordering Guide

Typical catalog number example: **ACHL189-01SNP**

(catalog number is created based on customer selection of product parameters, see below for example)

ACHL189-01	S	N	P
Pump Series Type/Size/Ratio	**Liquid Inlet Location**	**Isolation Chamber**	**Liquid Seal Material**
ACHL • Compact Liquid High Pressure Pump with hand lever • 3" Single Piston Air Drive • 1:213 Max. Air-to-Liquid Pressure Ratio • Maximum 31,900 psi (2,199 bar)	**S*** = Side **B** = Bottom	**N*** = None	**P*** = UHMWPE U-Cup with Elgiloy Spring Energizer **U** = Urethane U-Cup

* Standard for stock pumps

Flow Rate Table: Air Drive Pressure (psi) vs. Outlet Pressure (psi)

Catalog Number	Air Drive Pressure (psi)	Outlet Pressure (psi)											
		0	500	1,500	3,000	5,000	7,500	10,000	15,000	25,000	40,000	55,000	
ACHL72-01	60	42	32	17	9	1							in^3/min.
	90	42	34	25	18	7	1						
	120	43	35	29	24	17	7	2					
ACHL189-01	60	15	15	15	15	14	13	8					
	90	15	15	15	15	15	13	11	7				
	120	15	15	15	15	15	13	12	8	1			

ASL SERIES Single-Acting, Single or Double Piston Air Drive

- Single-Acting, Single and Double Piston Air Drive
- Service: Oil, Water, Water/Oil mixture and other fluids depending on material compatibility
- Maximum Operating Temperature: 0-140º F (-18º to 60º C)
- Pressure Head: 316 Stainless Steel
- Check Valve Glands: 316 Stainless Steel
- Liquid Seal: see Ordering Guide for options
- Air Drive Seals: Buna N

Reference Guide

Pump Model Series	Pressure Ratio	Maximum Rated Outlet Pressure PSI (bar)	Displacement Per Cycle .in³ (cm³)	Liquid Connections	
				Inlet	Outlet
ASL Series					
ASL10-01	1:11	1,600 (110)	5.22 (85.5)	1” FNPT	1/2” FNPT
ASL15-01	1:16	2,300 (159)	3.62 (59.3)	1” FNPT	1/2” FNPT
ASL25-01	1:28	4,000 (276)	2.10 (34.4)	1/2” FNPT	1/2” FNPT
ASL35-01	1:39	5,600 (386)	1.50 (24.64)	1/2” FNPT	1/2” FNPT
ASL60-01	1:70	10,000 (689)	0.84 (13.8)	1/2” FNPT	1/2” FNPT
ASL100-01	1:113	15,000 (1,034)	0.52 (8.5)	1/2” FNPT	1/2” FNPT
ASL150-01	1:150	21,500 (1,482)	0.39 (6.4)	1/2” FNPT	F250C
ASL250-01	1:265	38,400 (2,648)	0.22 (3.6)	1/2” FNPT	F250C
ASL400-01	1:398	57,700 (3,978)	0.14 (2.3)	1/2” FNPT	F250C
ASL10-02	1:22	3,200 (221)	5.22 (85.5)	1” FNPT	1/2” FNPT
ASL15-02	1:32	4,600 (317)	3.62 (59.3)	1” FNPT	1/2” FNPT
ASL25-02	1:56	8,100 (558)	2.10 (34.4)	1/2” FNPT	1/2” FNPT
ASL35-02	1:78	11,200 (772)	1.50 (24.64)	1/2” FNPT	1/2” FNPT
ASL60-02	1:140	20,000 (1,379)	0.84 (13.8)	1/2” FNPT	9/16” SF562CX
ASL100-02	1:226	31,000 (2,137)	0.52 (8.5)	1/2” FNPT	F250C
ASL150-02	1:300	43,000 (2,965)	0.39 (6.4)	1/2” FNPT	F250C
ASL250-02	1:530	60,000 (4,137)	0.22 (3.6)	1/2” FNPT	F250C
ASL400-02	1:796	60,000 (4,137	0.14 (2.3)	1/2” FNPT	F250C

Ordering Guide

Typical catalog number example: **ASL250-01SNP** (catalog number is created based on customer selection of product parameters, see below for example)

ASL250-01	S	N	P
Pump Series Type/Size/Ratio	**Liquid Inlet Location**	**Isolation Chamber**	**Liquid Seal Material**
ASL • Standard Liquid High Pressure Pump • 6" Single Piston Air Drive • 1:265 Max. Air-to-Liquid Pressure Ratio • Maximum 38,400 psi (2,648 bar)	**S*** = Side **B** = Bottom	**N*** = None **C** = Included	**P*** = UHMWPE U-Cup **(See table below)**

* Standard for stock pumps

Available seal material for the following models.

Model Number	Seal Material
ASL10 ASL15	***PV** = UHMWPE U-Cup and Viton O-Rings **PE** = UHMWPE U-Cup and EPDM O-Rings **PB** = UHMWPE U-Cup and Buna-N O-Rings **PC** = UHMWPE U-Cup and Perfluoroelastomer O-Rings **UV** = Urethane U-Cup and Viton O-Rings **UE** = Urethane U-Cup and EPDM O-Rings **UB** = Urethane U-Cup and Buna-N O-Rings **TV** = Thermoplastic Polyester U-Cup and Viton O-Rings **TE** = Thermoplastic Polyester U-Cup and EPDM O-Rings **TB** = Thermoplastic Polyester U-Cup and Buna-N O-Rings **TC** = Thermoplastic Polyester U-Cup and Perfluoroelastomer O-Rings
ASL25 ASL35	***PV** = UHMWPE U-Cup and Viton O-Rings **PE** = UHMWPE U-Cup and EPDM O-Rings **PB** = UHMWPE U-Cup and Buna-N O-Rings **PC** = UHMWPE U-Cup and Perfluoroelastomer O-Rings **UV** = Urethane U-Cup and Viton O-Rings **UE** = Urethane U-Cup and EPDM O-Rings **UB** = Urethane U-Cup and Buna-N O-Rings
ASL60	***P** = UHMWPE U-Cup with Elgiloy Spring O-Rings **UV** = Urethane U-Cup and Viton O-Rings **UE** = Urethane U-Cup and EPDM O-Rings **UB** = Urethane U-Cup and Buna-N O-Rings
ASL100 ASL150 ASL250 ASL400	***P** = UHMWPE U-Cup **UE** = Urethane U-Cup

* Standard for stock pumps

Air Drive Connection - All ASL series pumps have a 1/2” FNPT main air drive supply connection and utilize a 1/8” FNPT pilot port connection for remote start/stop operation. It is recommended to operate the pilot port at a higher air pressure than the main air drive supply pressure for proper function.

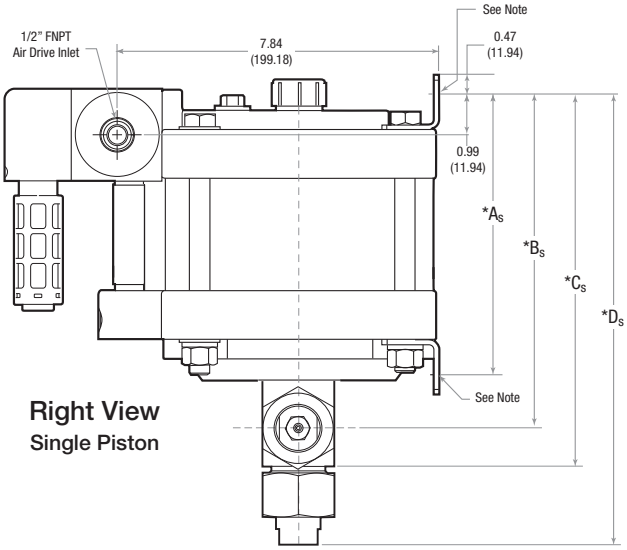

Right View
Single Piston

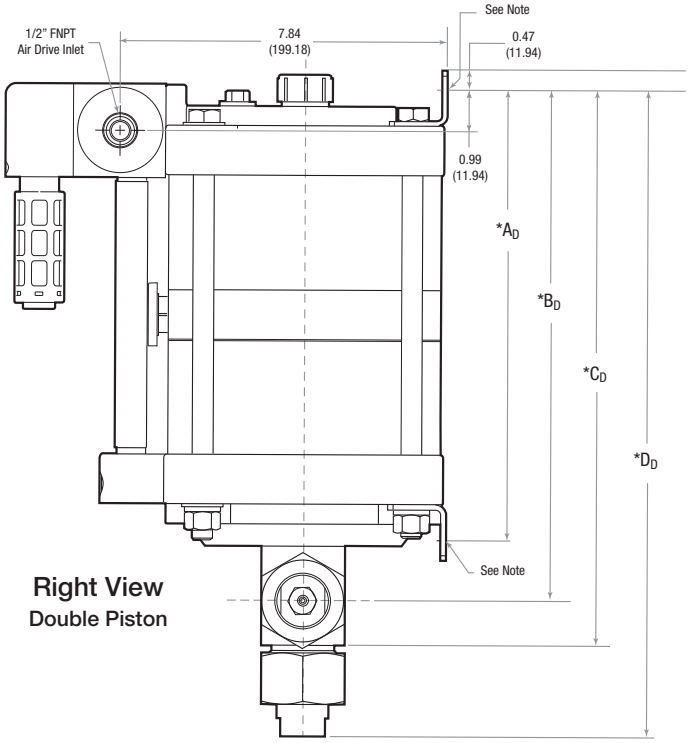

Right View
Double Piston

*See following page for product dimensions.

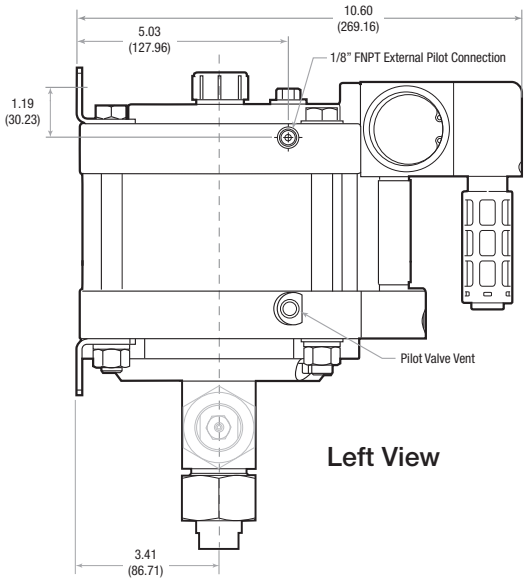

Left View

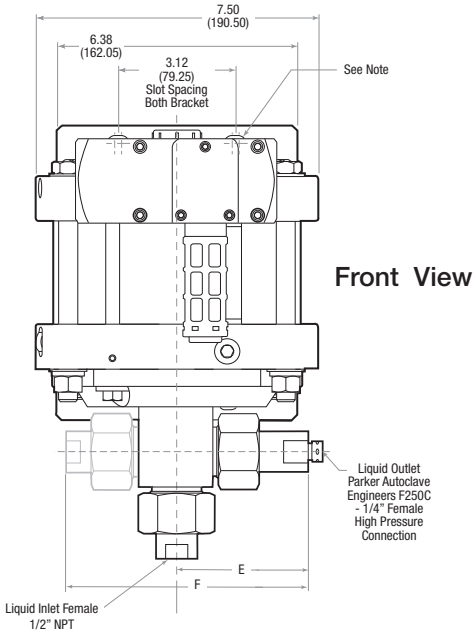

Front View

Note:

Each mounting bracket includes (2) x 11/32” (8.73) slots for 5/16” bolts.

Bottom inlet pump head and side inlet pump head are mutually exclusive.
All dimensions are for reference only and are subject to change without notice.

Primary dimensions: Inches

Secondary Dimensions: (Millimeters)

ASL Series: Dimensions

Pump Model Series	A_S	B_S	C_S	D_S	E_S	F_S	G_S
Single Piston Air Drive							
ASL10-01	6.87 (175)	8.25 (210)	9.83 (250)	12.51 (318)	3.27 (83)	7.57 (192)	3.95 (100)
ASL15-01	6.87 (175)	8.25 (210)	9.83 (250)	12.51 (318)	3.27 (83)	7.57 (192)	3.95 (100)
ASL25-01	6.87 (175)	8.25 (210)	9.83 (250)	11.54 (293)	3.27 (83)	6.92 (176)	3.95 (100)
ASL35-01	6.87 (175)	8.25 (210)	9.83 (250)	11.54 (293)	3.27 (83)	6.92 (176)	3.95 (100)
ASL60-01	6.87 (175)	8.31 (211)	9.25 (235)	12.10 (307)	3.43 (87)	7.24 (184)	3.95 (100)
ASL100-01	6.87 (175)	8.31 (211)	9.25 (235)	12.10 (307)	3.43 (87)	7.24 (184)	3.95 (100)
ASL150-01	6.87 (175)	8.31 (211)	9.25 (235)	11.55 (293)	4.18 (106)	7.45 (189)	3.95 (100)
ASL250-01	6.87 (175)	8.31 (211)	9.25 (235)	11.55 (293)	4.18 (106)	7.45 (189)	3.95 (100)
ASL400-01	6.87 (175)	8.37 (213)	9.39 (239)	11.74 (298)	2.75 (70)	6.13 (156)	3.95 (100)

Pump Model Series	A_D	B_D	C_D	D_D	E_D	F_D	G_D
Double Piston Air Drive							
ASL10-02	10.81 (275)	12.19 (310)	13.77 (350)	16.45 (418)	3.27 (83)	7.57 (192)	3.95 (100)
ASL15-02	10.81 (275)	12.19 (310)	13.77 (350)	16.45 (418)	3.27 (83)	7.57 (192)	3.95 (100)
ASL25-02	10.81 (275)	12.19 (310)	13.77 (350)	15.48 (393)	3.27 (83)	6.92 (176)	3.95 (100)
ASL35-02	10.81 (275)	12.19 (310)	13.77 (350)	15.48 (393)	3.27 (83)	6.92 (176)	3.95 (100)
ASL60-02	10.81 (275)	12.25 (311)	13.19 (335)	16.04 (407)	3.43 (87)	7.24 (184)	3.95 (100)
ASL100-02	10.81 (275)	12.25 (311)	13.19 (335)	15.50 (394)	4.18 (106)	7.24 (184)	3.95 (100)
ASL150-02	10.81 (275)	12.25 (311)	13.19 (335)	15.50 (394)	4.18 (106)	7.45 (189)	3.95 (100)
ASL250-02	10.81 (275)	12.30 (312)	13.32 (338)	15.68 (398)	2.75 (70)	7.45 (189)	3.95 (100)
ASL400-02	10.81 (275)	12.30 (312)	13.32 (338)	15.68 (398)	2.75 (70)	6.13 (156)	3.95 (100)

Note:

Each mounting bracket includes two (2) x 13/32” (10.32) slots for 3/8” bolts. Bottom inlet pump head and side inlet pump head are mutually exclusive. All dimensions are for reference only and are subject to change without notice.

Primary Dimensions: Inches
Secondary Dimensions: (Millimeters)

Flow Rate Table: Air Drive Pressure (psi) vs. Outlet Pressure (psi)

Catalog Number	Air Drive Pressure (psi)	Outlet Pressure (psi)											
		0	500	1,500	3,000	5,000	7,500	10,000	15,000	25,000	40,000	55,000	
ASL10-01	60	1277	489										
	90	305	826										
	120	1360	925										
ASL15-01	60	887	485										
	90	906	591										
	120	945	642	474									
ASL25-01	60	508	342	127									
	90	520	387	303									
	120	543	427	360	202								
ASL35-01	60	315	273	121									
	90	322	291	211	58								
	120	328	302	250	157								
ASL60-01	60	168	155	125	79								
	90	175	161	134	106	63							
	120	182	167	140	118	94	45						
ASL100-01	60	104	99	88	70	46							
	90	108	103	92	78	65	44	11					
	120	112	106	95	83	72	60	47					
ASL150-01	60	81	79	76	66	49	19						in^3 /min.
	90	83	82	80	75	67	53	35					
	120	84	83	82	78	73	66	55	25				
ASL250-01	60	46	45	44	42	37	26	20	2				
	90	47	46	45	44	43	40	36	26				
	120	48	47	47	46	45	43	41	34	17			
ASL400-01	60	39	38	37	36	33	29	23	10				
	90	40	39	38	38	37	35	32	26	8			
	120	41	40	39	38	38	37	36	32	21			
ASL10-02	60	880	720										
	90	890	800	350									
	120	900	840	570									
ASL15-02	60	615	550	200									
	90	625	575	410									
	120	630	600	500	225								
ASL25-02	60	345	330	265	60								
	90	350	335	300	208	15							
	120	355	345	320	265	150							
ASL35-02	60	240	230	210	115								
	90	242	232	225	190	115							
	120	245	235	230	210	170	95						

Catalog Number	Air Drive Pressure (psi)	Outlet Pressure (psi)											
		0	500	1,500	3,000	5,000	7,500	10,000	15,000	25,000	40,000	55,000	
ASL60-02	60	150	148	145	120	70	2						in^3 /min.
	90	155	152	147	136	117	80	33					
	120	157	154	152	145	133	112	82	8				
ASL100-02	60	86	84	82	77	72	53	30					
	90	87	86	84	82	82	70	61	36				
	120	89	88	86	84	84	77	72	57	13			
ASL150-02	60	64	64	63	60	57	50	38	14				
	90	65	65	64	62	60	57	53	41	9			
	120	66	66	65	64	63	61	58	51	32			
ASL250-02	60	37	36	36	35	35	34	32	27	12			
	90	37	36	36	36	36	36	34	31	25	10		
	120	37	37	36	36	36	36	35	34	30	21	9	
ASL400-02	60	31	31	30	30	29	29	28	26	16			
	90	31	31	31	30	30	30	29	27	23	14	2	
	120	31	31	31	31	30	30	30	29	27	21	14	

AHL SERIES Double-Acting, Double Piston Air Drive

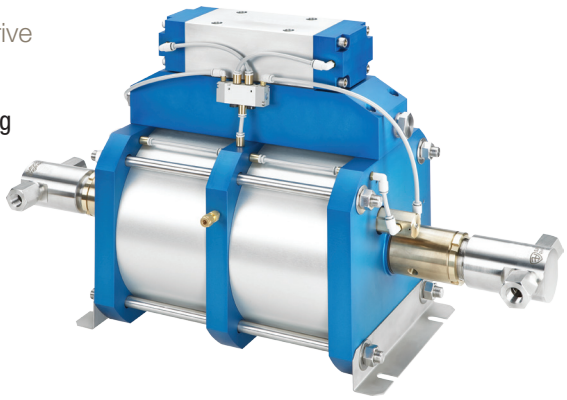

- Service: Oil, Water, Water/Oil mixture and other fluids depending on material compatibility
- Maximum Operating Temperature: 0-140º F (-18º to 60º C)
- Pressure Head: 15-5 PH Stainless Steel
- Check Valve Glands: 316 Stainless Steel
- Liquid Seal: see Ordering Guide for options
- Air Drive Seals: Buna N

Reference Guide

Pump Model Series	Pressure Ratio	Maximum Rated Outlet Pressure PSI (bar)	Displacement Per Cycle .in³ (cm³)	Liquid Connections	
				Inlet	Outlet
AHL Series					
AHL33-2D	1:67	6,700 (462)	15.3 (250.7)	1” FNPT	1/2” FNPT
AHL66-2D	1:133	13,300 (917)	7.8 (127.8)	1/2” FNPT	1/2” FNPT

Air Drive Connection - All AHL series pumps have a 1” FNPT main air drive supply connection and utilize a 1/8” FNPT pilot port connection for remote start/stop operation. It is recommended to operate the pilot port at a higher air pressure than the main air drive supply pressure for proper function.

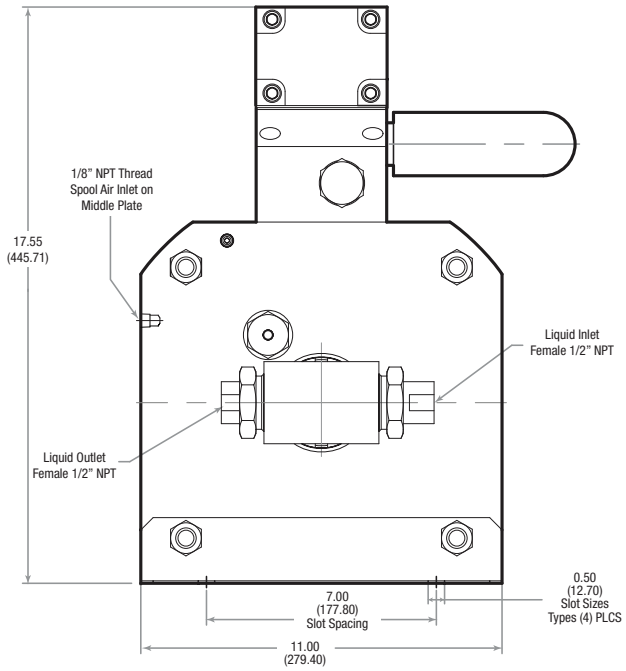

Side View

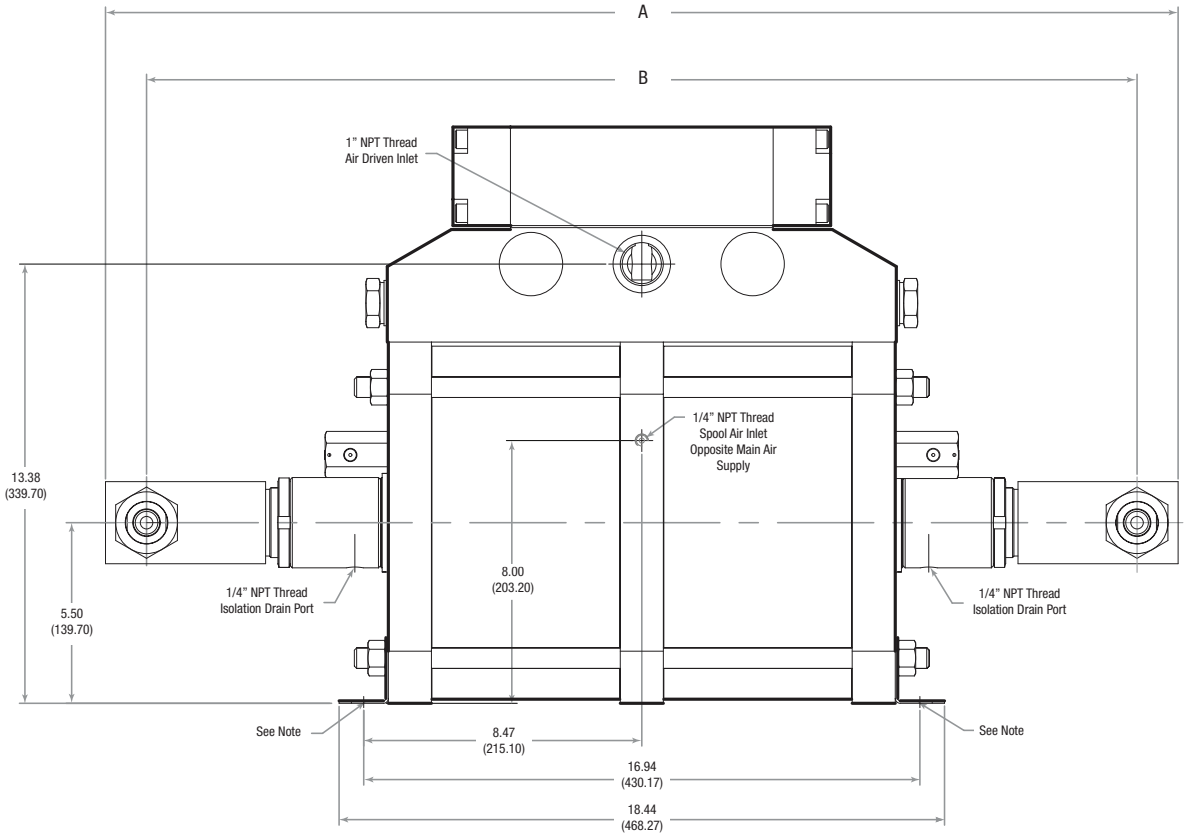

Front View

Note:
Each mounting bracket includes (2) x 9/16" (8.73) slots for 1/2" bolts.
Bottom inlet pump head and side inlet pump head are mutually exclusive.
All dimensions are for reference only and are subject to change without notice.
Primary dimensions: Inches
Secondary Dimensions: (Millimeters)

Model	A	B
AHL66	32.66 (829.61)	30.16 (766.11)
AHL33	32.41 (823.21)	30.42 (772.41)

Ordering Guide

Typical catalog number example: **AHL66-2DSCUV** (catalog number is created based on customer selection of product parameters, see below for example)

AHL66-2D	S	C	UV
Pump Series Type/Size/Ratio	**Liquid Inlet Location**	**Isolation Chamber**	**Liquid Seal Material (AHL33 and AHL66)**
AHL • High Flow Liquid High Pressure Pump • 10" Dual Piston Air Drive • 1:133 Max. Air-to-Liquid Pressure Ratio • Maximum 13,300 psi (917 bar) • Double Acting Liquid Heads	**S*** = Side	**C*** = Included	**UV*** = Urethane U-Cup and Viton O-Rings **UE** = Urethane U-Cup and EPDM O-Rings **UB** = Urethane U-Cup and Buna-N O-Rings **TV** = Thermoplastic Polyester U-Cup and Viton O-Rings **TE** = Thermoplastic Polyester U-Cup and EPDM O-Rings **TB** = Thermoplastic Polyester U-Cup and Buna-N O-Rings **TC** = Thermoplastic Polyester U-Cup and Perfluoroelastomer O-Rings **C** = Perfluoroelastomer O-Rings

* Standard for stock pumps

Liquid Flow Rate vs. Outlet Pressure:

AHL33-2DSC Series

Approximate Air Drive Pressure: 100 psi			
Pressure (PSI)	Pressure (bar)	Flow (gpm)	Flow (liter/min)
0	0	7.6* (see note 2)	28.8* (see note 2)
1000	69	6.1	23.0
2000	138	5.7	21.5
3000	207	4.9	18.4
4000	276	4.0	15.2
5000	345	3.2	12.3
6000	414	1.8	6.9

Nominal Liquid Pressure (Stalled)			
Air Drive Pressure		Liquid Pressure	
PSI	bar	PSI	bar
20	1.4	1340	92.4
30	2.1	2010	138.6
40	2.8	2680	184.8
50	3.4	3350	231.0
60	4.1	4020	277.2
70	4.8	4690	323.4
80	5.5	5360	369.6
90	6.2	6030	415.8
100	6.9	6700	461.9

Liquid Flow Rate vs. Outlet Pressure:

AHL66-2DSC Series

Approximate Air Drive Pressure: 100 psi			
Pressure (PSI)	Pressure (bar)	Flow (gpm)	Flow (liter/min)
0	0	3.6* (see note 2)	13.7* (see note 2)
1000	69	3.4	12.9
2000	138	3.1	12.0
3000	207	2.9	11.2
4000	276	2.7	10.3
5000	345	2.5	9.5
6000	414	2.3	8.7
7000	483	2.2	8.2
8000	552	2.0	7.7
9000	621	1.8	6.7
10000	690	1.5	5.7
11000	759	1.3	4.8
12000	828	1.0	3.9

Nominal Liquid Pressure (Stalled)			
Air Drive Pressure		Liquid Pressure	
PSI	bar	PSI	bar
20	1.4	2660	183.4
30	2.1	3990	275.2
40	2.8	5320	366.9
50	3.4	6650	458.6
60	4.1	7980	550.3
70	4.8	9310	642.1
80	5.5	10640	733.8
90	6.2	11970	825.5
100	6.9	13300	917.2

Note:
1. Actual flow rates will vary depending on air flow capacity, downstream flow restrictions, and fluid type.
2. Flow valve at approximately 50 psi air drive pressure.

AFL SERIES Double-Acting, Single Piston Air Drive

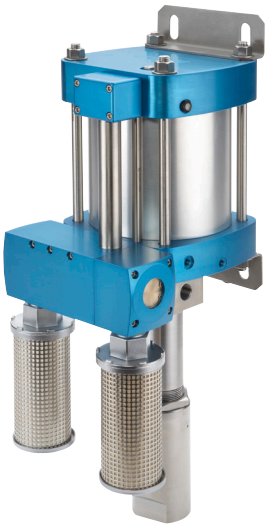

- Service: Oil, Water, Water/Oil mixture and other fluids depending on material compatibility
- Maximum Operating Temperature: 0-140º F (-18º to 60º C)
- Pressure Head: 15-5 PH Stainless Steel
- Check Valve Glands: 316 Stainless Steel
- Liquid Seal: see Ordering Guide for options
- Air Drive Seals: Buna N

Reference Guide

Pump Model Series	Pressure Ratio	Maximum Rated Outlet Pressure PSI (bar)	Displacement Per Cycle in³ (cm³)	Liquid Connections	
				Inlet	Outlet
AFL Series					
AFL35-1D	1:39	5,600 (386)	6.02 (98.7)	1” FNPT	9/16” SF562CX
AFL60-1D	1:70	10,000 (690)	3.40 (55.7)	1” FNPT	9/16” SF562CX
AFL100-1D	1:113	15,000 (1034)	2.30 (37.7)	1” FNPT	9/16” SF562CX

Air Drive Connection - All ASL series pumps have a 1” FNPT main air drive supply connection and utilize a 1/8” FNPT pilot port connection for remote start/stop operation. It is recommended to operate the pilot port at a higher air pressure than the main air drive supply pressure for proper function.

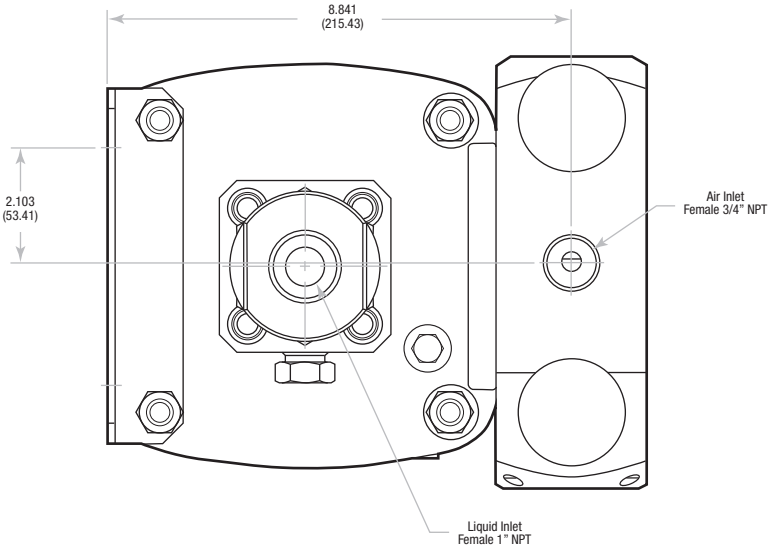

Bottom View

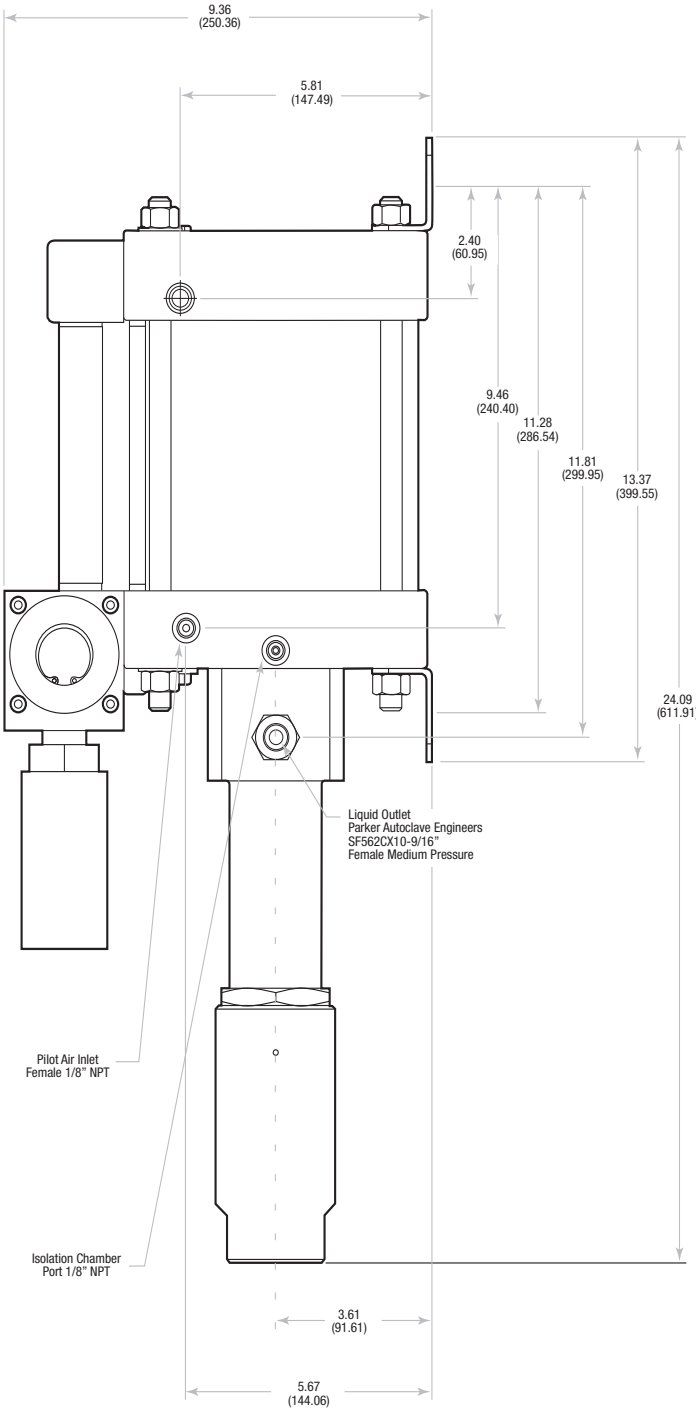

Right View

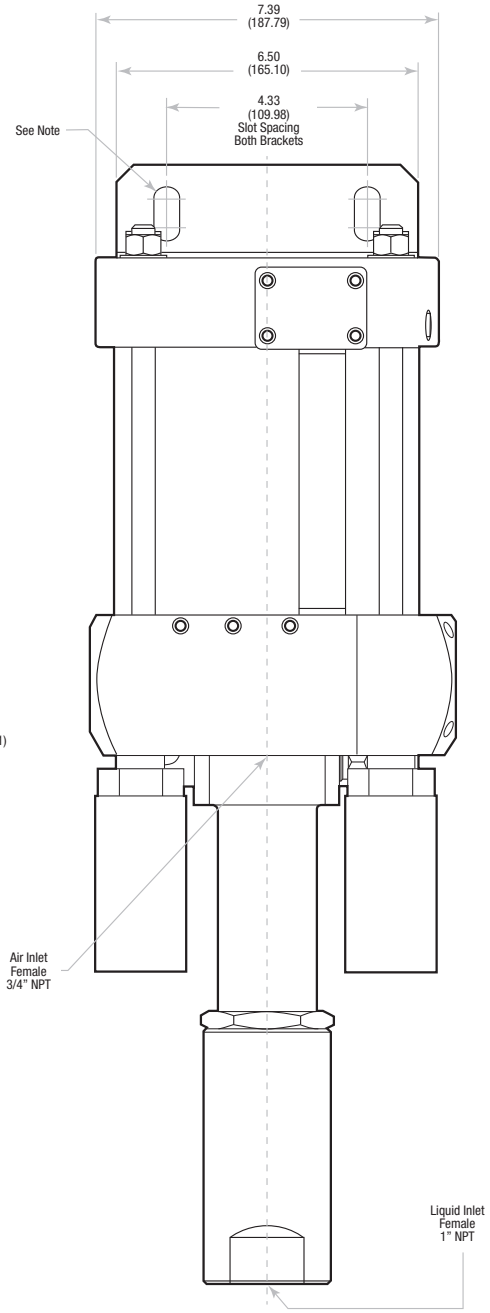

Front View

Note:

Each mounting bracket includes (2) x 9/16" (14.29) slots for 1/2" bolts.
Bottom inlet pump head and side inlet pump head are mutually exclusive.
All dimensions are for reference only and are subject to change without notice.

Primary dimensions: Inches
Secondary Dimensions: (Millimeters)

Ordering Guide

Typical catalog number example: **AFL100-1DBPV** (catalog number is created based on customer selection of product parameters, see below for example)

AFL100-1D	B	C	PV
Pump Series Type/Size/Ratio	**Liquid Inlet Location**	**Isolation Chamber**	**Liquid Seal Material (AFL35, AFL60, AFL100)**
AFL • High Flow, High Pressure Pump • 6" Dual Piston Air Drive • 1:113 Max. Air-to-Liquid Pressure Ratio • Maximum 15,000 psi (1034 bar) • Single Ended, Double Acting Liquid Heads	**B*** = Bottom	**C*** = Included	**PV*** = UHMWPE U-Cup and Viton O-Rings **PE** = UHMWPE U-Cup and EPDM O-Rings **PB** = UHMWPE U-Cup and Buna-N O-Rings **PC** = UHMWPE U-Cup and Perfluoroelastomer O-Rings

* Standard for stock pumps

Flow Rate Table: Air Drive Pressure (psi) vs. Outlet Pressure (psi)

Catalog Number	Air Drive Pressure (psi)	Outlet Pressure (psi)								
		0	500	1,500	3,000	4,500	6,000	10,000	15,000	
AFL35	60	24	19	9						Liters /min.
	90	25	21	16	6					
	120	26	23	19	12	2				
AFL60	60	14	12	9	4					
	90	14	13	11	8	6	1			
	120	15	14	12	10	8	6			
AFL100	60	10	9	7	5	3	1			
	90	11	10	8	7	6	5	1		
	120	12	11	9	8	7	6	3		

Packaged Pressure Systems

Since our beginning in 1946, Parker Autoclave Engineers has been the world's market leader in the development and manufacture of high and ultra-high pressure components, valves and systems. At our modern factory in Erie Pennsylvania, USA we have engineers with the specialized experience to design and create products commonly used to control pressures exceeding 100,000 psi (6900 bar) while consistently exceeding customer expectations.

Using the knowledge developed over the last 70 years, Parker Autoclave Engineers Packaged Pressure Systems have been developed to incorporate any of our Air-Driven, High Pressure Liquid pumps, valves and fittings into a wide range of self-contained portable, or custom framed modules that "plug and play" for virtually any test, control, or injection system you can imagine. They vary in size, flow capability, output pressure and can include optional features such as chart recording, data logging, cycle counters, injection controllers and almost any kind of electric or pneumatic valve control option. Applications include: Hydrostatic/Burst/Leak/Functional testing, Chemical injection,Valve/Hose/Gauge testing, Bolt tensioning, Hydraulic Control systems, Laboratory Research and Autofrettage systems.

Portable Pressure Systems

Move your high pressure test stand anywhere you need it to be...

Powder Coated Steel, Stainless Steel or Aluminum Frame Options
Single or Dual Pump Systems with or without reservoir
Utilizes any Combination ASL, ACL, ACHL, AFL, or AHL Air-Driven Liquid Pumps
Outlet Pressures to 60,000 PSI (4140 bar) – Flows to 7.6 GPM (29 lpm)
Vertical or Horizontal Frame Designs with Optional Casters
Totally Self Contained-Electricity not Required, Only Air
All Air Controls Included, No Lubrication Needed
Isolation Valves, Relief Valves, Rupture Disks, Stroke Counters
and other Options Available

Custom Pressure Systems

Modify the Standard Design to Incorporate Specified Instruments or Request Fit-for-Purpose Designs

Powder Coated Steel, Aluminum or Stainless Steel Open/Enclosed Frame Options
Fit-for-Purpose Enclosures/Benches/Reels or Test Chambers
Utilize any Parker Autoclave Engineers Air-Driven Liquid Pump
Options Include All Standard Options plus: Remote Controlled Valves,
Chart Recorders, Data Loggers, PLC or Computer Controls, and Digital Displays.

Call for more information or visit us online at www.autoclave.com

Parker Worldwide

AE – UAE, Dubai
Tel: +971 4 8875600
parker.me@parker.com

AR – Argentina, Buenos Aires
Tel: +54 3327 44 4129
falecom@parker.com

AT – Austria, Wiener Neustadt
Tel: +43 (0)2622 23501-0
parker.austria@parker.com

AT – Eastern Europe, Wiener Neustadt
Tel: +43 (0)2622 23501 970
parker.easteurope@parker.com

AU – Australia, Dandenong
Tel: +61 (0)3 9768 5555
customer.service.au@parker.com

AZ – Azerbaijan, Baku
Tel: +994 50 2233 458
parker.azerbaijan@parker.com

BE/LX – Belgium, Nivelles
Tel: +32 (0)67 280 900
parker.belgium@parker.com

BR – Brazil, Sao Jose dos Campos
Tel: +55 12 4009 3504
falecom@parker.com

BY – Belarus, Minsk
Tel: +375 17 209 9399
parker.belarus@parker.com

CA – Canada, Grimsby, Ontario
Tel +1 905-945-2274
ipd_canada@parker.com

CH – Switzerland, Etoy
Tel: +41 (0) 21 821 02 30
parker.switzerland@parker.com

CL – Chile, Santiago
Tel: +56 (0) 2 2303 9640
falecom@parker.com

CN – China, Shanghai
Tel: +86 21 2899 5000
INGtechnical.china@parker.com

CZ – Czech Republic, Klecany
Tel: +420 284 083 111
parker.czechrepublic@parker.com

DE – Germany, Kaarst
Tel: +49 (0)2131 4016 0
parker.germany@parker.com

DK – Denmark, Ballerup
Tel: +45 43 56 04 00
parker.denmark@parker.com

ES – Spain, Madrid
Tel: +34 902 33 00 01
parker.spain@parker.com

FI – Finland, Vantaa
Tel: +358 (0)20 753 2500
parker.finland@parker.com

FR – France, Contamine s/Arve
Tel: +33 (0)4 50 25 80 25
parker.france@parker.com

GR – Greece, Athens
Tel: +30 210 933 6450
parker.greece@parker.com

HU – Hungary, Budapest
Tel: +36 1 220 4155
parker.hungary@parker.com

ID – Indonesia, Tangerang
Tel: +62 (0)21 7588 1906
parker.id@parker.com

IE – Ireland, Dublin
Tel: +353 (0)1 466 6370
parker.ireland@parker.com

IN – India, Mumbai
Tel: +91 22 6513 7081-85

IT – Italy, Corsico (MI)
Tel: +39 02 45 19 21
parker.italy@parker.com

JP – Japan, Tokyo
Tel: +(81) 3 6408 3900
infophj@parker.com

KR – South Korea, Seoul
Tel: +82 2 559 0400
parkerkr@parker.com

KZ – Kazakhstan, Almaty
Tel: +7 7272 505 800
parker.easteurope@parker.com

LV – Latvia, Riga
Tel: +371 6 745 2601
parker.latvia@parker.com

MX – Mexico, Toluca
Tel: +52 722 275 4200
contacto@parker.com

MY – Malaysia, Selangor
Tel: +603 784 90 800
parkermy@parker.com

NL – The Netherlands, Oldenzaal
Tel: +31 (0)541 585 000
parker.nl@parker.com

NO – Norway, Stavanger
Tel: +47 (0)51 826 300
parker.norway@parker.com

NZ – New Zealand, Mt Wellington
Tel: +64 9 574 1744

PL – Poland, Warsaw
Tel: +48 (0)22 573 24 00
parker.poland@parker.com

PT – Portugal, Leca da Palmeira
Tel: +351 22 999 7360
parker.portugal@parker.com

RO – Romania, Bucharest
Tel: +40 21 252 1382
parker.romania@parker.com

RU – Russia, Moscow
Tel: +7 495 645-2156
parker.russia@parker.com

SE – Sweden, Spånga
Tel: +46 (0)8 59 79 50 00
parker.sweden@parker.com

SG – Singapore,
Tel: +65 6887 6300
parkersg@parker.com

SK – Slovakia, Banská Bystrica
Tel: +421 484 162 252
parker.slovakia@parker.com

SL – Slovenia, Novo Mesto
Tel: +386 7 337 6650
parker.slovenia@parker.com

TH – Thailand, Bangkok
Tel: +66 2 186 7000
phthailand@parker.com

TR – Turkey, Istanbul
Tel: +90 216 4997081
parker.turkey@parker.com

TW – Taiwan, Taipei
Tel: +886 2 2298 8987
enquiry.taiwan@parker.com

UA – Ukraine, Kiev
Tel: +380 44 494 2731
parker.ukraine@parker.com

UK – United Kingdom, Warwick
Tel: +44 (0)1926 317878
parker.uk@parker.com

USA – IPD, Huntsville
Tel: +1 256 881 2040
ipdcct@parker.com

USA – Autoclave Engineers, Erie
Tel: +1 814 860 5700
ipdaecct@parker.com

VN – Vietnam, Hochi Minh City
Tel: +84 (0)8337 546 51
parker_viet@parker.com

ZA – South Africa, Kempton Park
Tel: +27 (0)11 961 0700
parker.southafrica@parker.com

WARNING

FAILURE, IMPROPER SELECTION OR IMPROPER USE OF THE PRODUCTS AND/OR SYSTEMS DESCRIBED HEREIN OR RELATED ITEMS CAN CAUSE DEATH, PERSONAL INJURY AND PROPERTY DAMAGE.

This document and other information from Parker Hannifin Corporation, its subsidiaries and authorized distributors provide product and/or system options for further investigation by users having technical expertise. It is important that you analyze all aspects of your application and review the information concerning the product or system in the current product catalog. Due to the variety of operating conditions and applications for these products or systems, the user, through its own analysis and testing, is solely responsible for making the final selection of the products and systems and assuring that all performance, safety and warning requirements of the application are met. The products described herein, including without limitation, product features, specifications, designs, availability and pricing, are subject to change by Parker Hannifin Corporation and its subsidiaries at any time without notice.

Offer of Sale

The items described in this document are available for sale by Parker Hannifin Corporation, its subsidiaries or its authorized distributors. Any sale contract entered by Parker will be governed by the provisions stated in Parker's standard terms and conditions of sale (copy available upon request).

02-9326BE May2015

Instrumentation Products Division
Autoclave Engineers Operation
8325 Hessinger Drive
Erie, PA 16509-4679
Tel: 814 860 5700
Fax: 814 860 5811
www.autoclave.com

Instrumentation Products Division
Autoclave Engineers Operation, Houston
15340 Vantage Parkway, East
Houston, TX 77032
Tel: 281 987 3828
Fax: 281 987 2318

Parker Hannifin Manufacturing Ltd.
Instrumentation Products Division, Europe
Industrial Estate Whitemill
Wexford, Republic of Ireland
Tel: 353 53 914 1566
Fax: 353 53 914 1582

Parker Hannifin Manufacturing Ltd.
Instrumentation Products Division, Europe
Riverside Road, Pottington Business Park
Barnstaple, UK, EX31 1NP, UK
Tel: 44 1271 313131
Fax: 44 1271 373636

Caution! Do not mix or interchange component parts or tubing with those of other manufacturers. Doing so is unsafe and will void warranty.

Caution! Parker Autoclave Engineers Valves, Fittings, and Tools are not designed to interface with common commercial instrument tubing and are designed to only connect with tubing manufactured to Parker Autoclave Engineers AES specifications. Failure to do so is unsafe and will void warranty.

ISO-9001 Certified