CB-2095

Clevis Bracket
Material: Steel, bright zinc plated

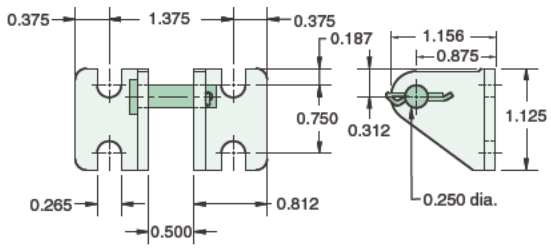

RC-2081

Rod Clevis
Material: Steel, electroless nickel plate

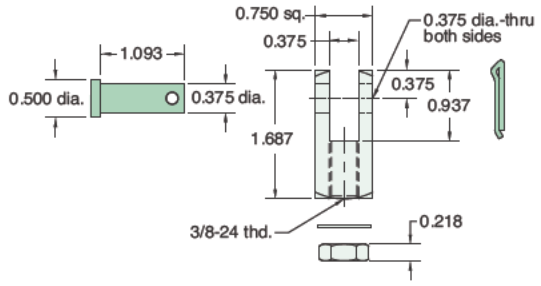

FB-2491

Foot Bracket
Material: Steel, bright zinc plated

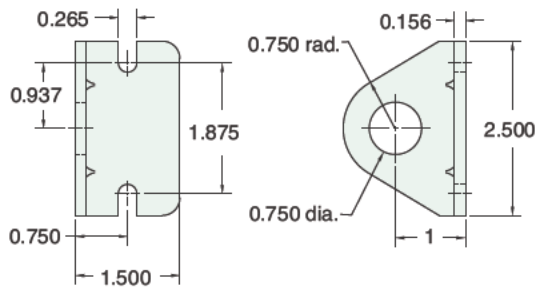

Mounting Nuts

Stud Nut

Part Number	Across Flats	Nut Thickness	Nut (Thread)
N12-16	1 3/32″	27/64″	3/4-16

Rod Nut

Part Number	Across Flats	Nut Thickness	Nut (Thread)
N06-24A	9/16″	7/32″	3/8-24
N06-24B	1/2″	3/32″	3/8-24

RE-2085

Rod End
Material: Steel, bright zinc plated body

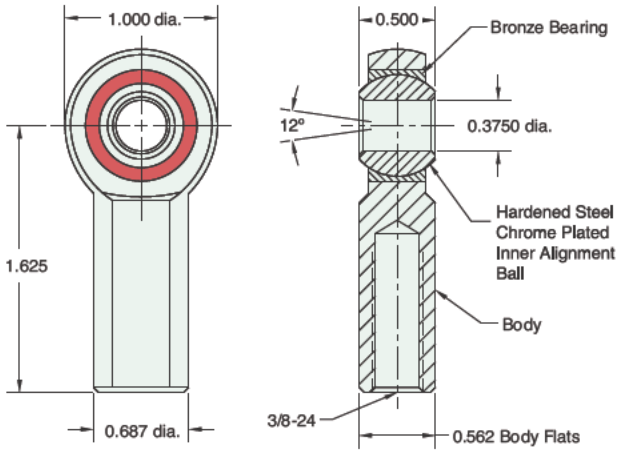

Max. Static Radial Load (rod end only): 3,950 lbs.
Fits Rod Thread Size: 3/8-24