M-1*i*A/1H

Max. load capacity at wrist: 1 kg

Max. reach: 280 mm

FANUC

Robot								Motion range (°)						Maximum speed (°/s)										Protection	
Series	Version	Type	Max.load capacity at wrist (kg)	Reach (mm)	Controlled axes	Repeatability (mm)	Mechanical weight (kg)	J1	J2	J3	J4	J5	J6	J1	J2	J3	J4	J5	J6	J4 Moment/Inertia (Nm/kgm²)	J5 Moment/Inertia (Nm/kgm²)	J6 Moment/Inertia (Nm/kgm²)	Average Power consumption (kW)	Body standard optional	Wrist & J3 arm standard/optional
M-1	*i*A	1H	1	280	3	± 0.02	18 *2)	ø 280 X 100 (*3)			-	-	-	-	-	-	-	-	-	*4)			0.2	IP20	IP20

● standard ○ on request - not available *2) with base *3) ø in mm by height in mm *4) refer to the wrist load diagram

M-1*i*A/1H 3-axis

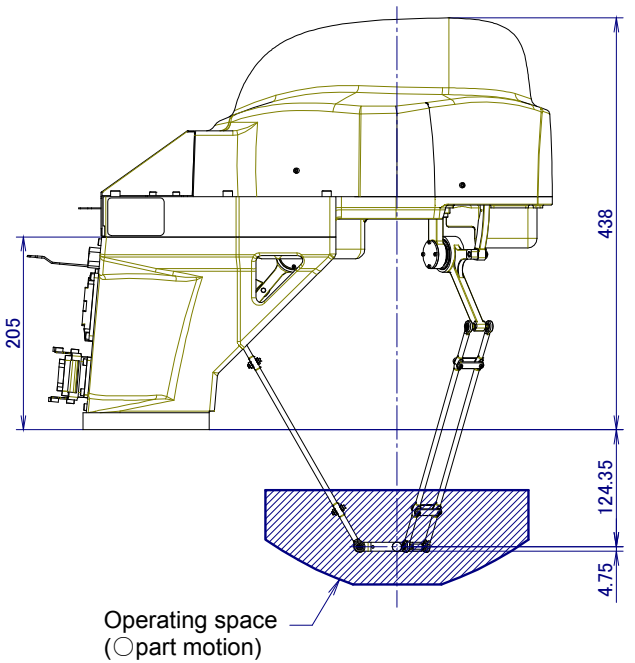

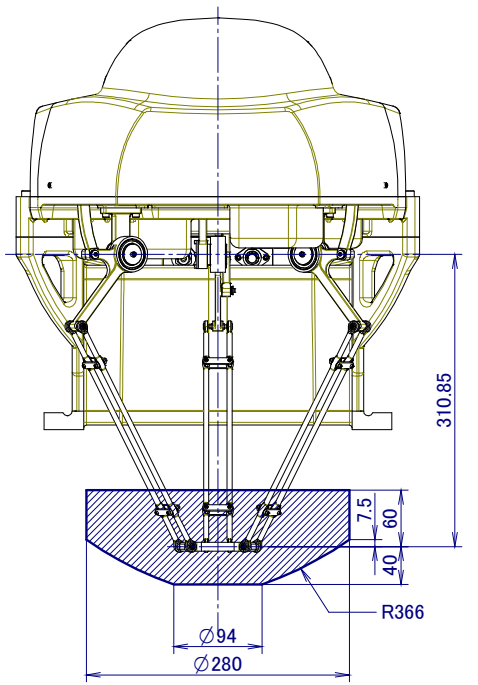

M-1*i*A/1Hv